HUMMER, H2 – SPORT UTILITY VEHICLE (SUV)

Exterior General Arrangement - N25706 1
Exterior General Arrangement - N25706 2
Interior Seating - N25706 3
Interior Seating - N25706 4
Frame & Crossmember Arrangement - N25706 5
Front Axle/Suspension Tire Data - N25706 6
Rear Axle/Suspension Tire Data - N25706 7
Exhaust System & Fuel Tank - N25706 8

HUMMER, H2 – SPORT UTILITY VEHICLE (SUV)

Exterior General Arrangement - N25706

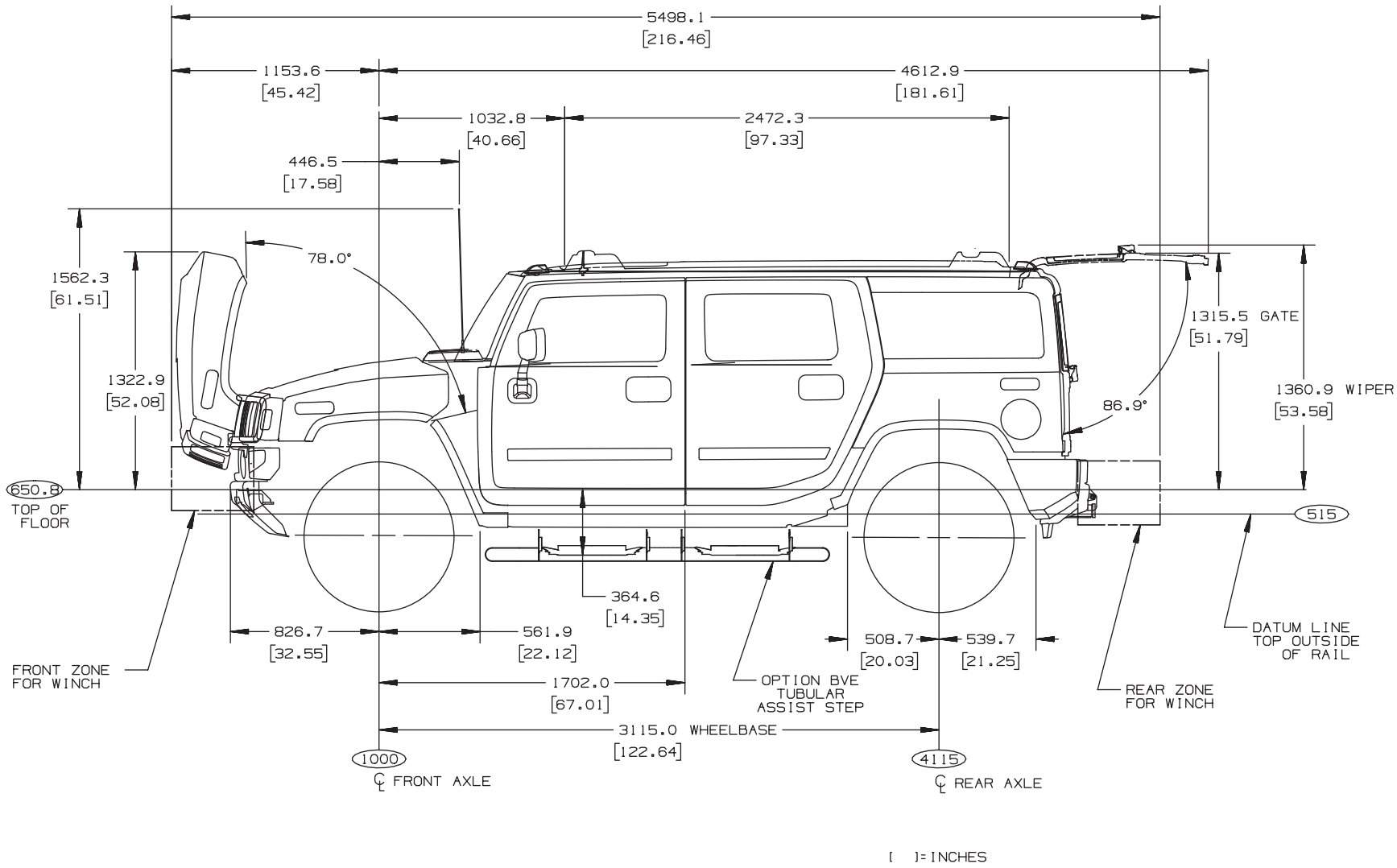

TD006000b

HUMMER, H2 – SPORT UTILITY VEHICLE (SUV)

Exterior General Arrangement - N25706

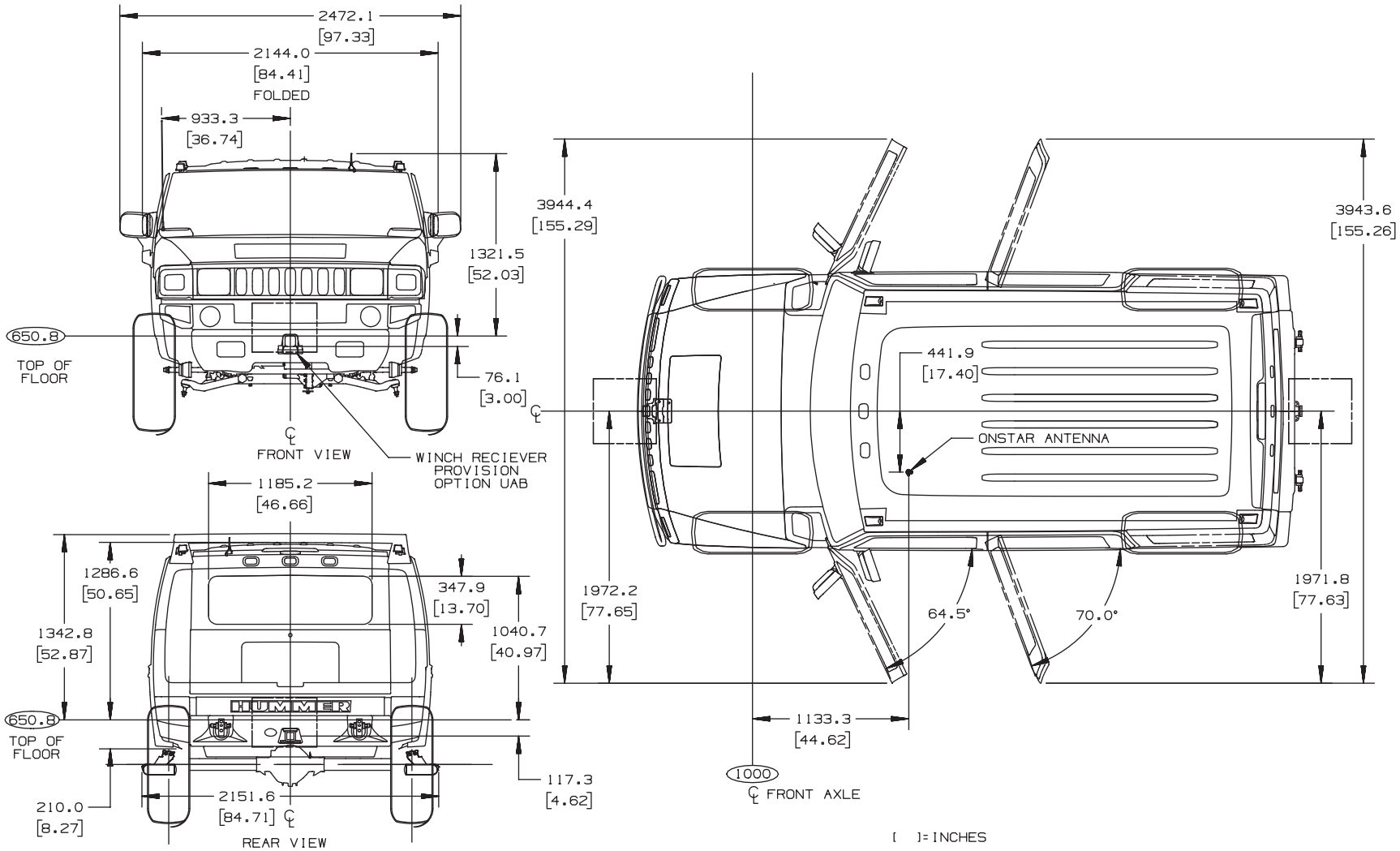

TD006000a

HUMMER, H2 – SPORT UTILITY VEHICLE (SUV)

Interior Seating - N25706

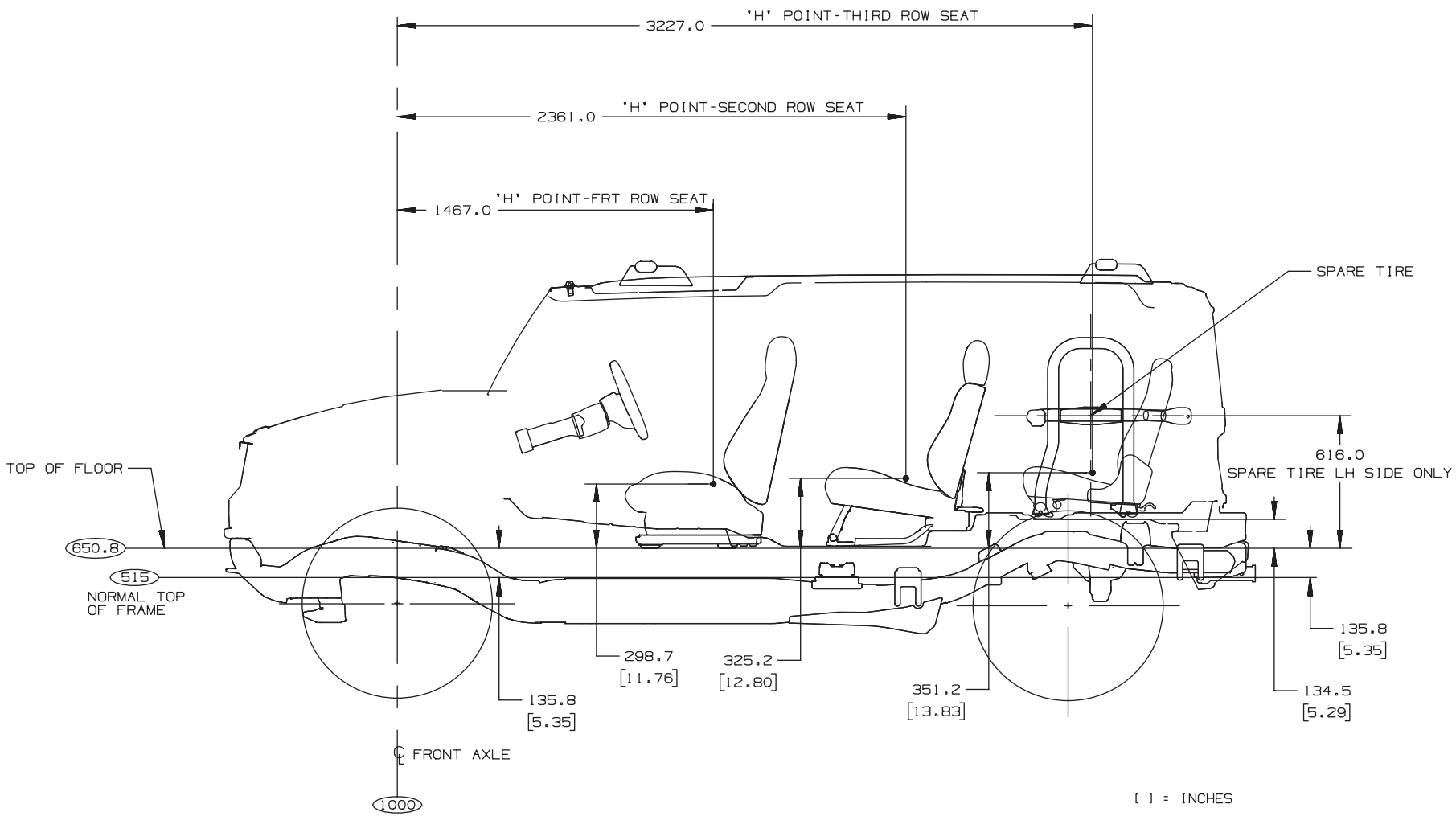

TD005999a

HUMMER, H2 – SPORT UTILITY VEHICLE (SUV)

Interior Seating - N25706

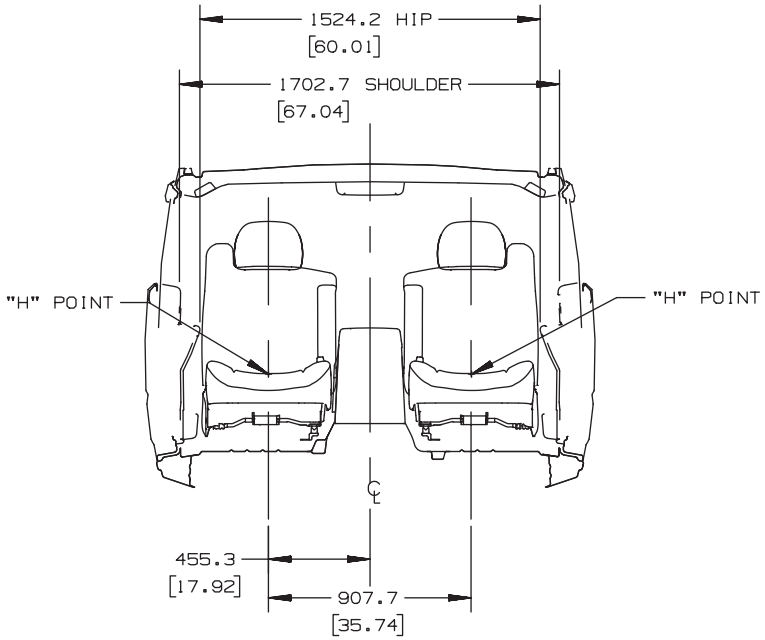

FRONT VIEW
OF FRONT ROW SEAT

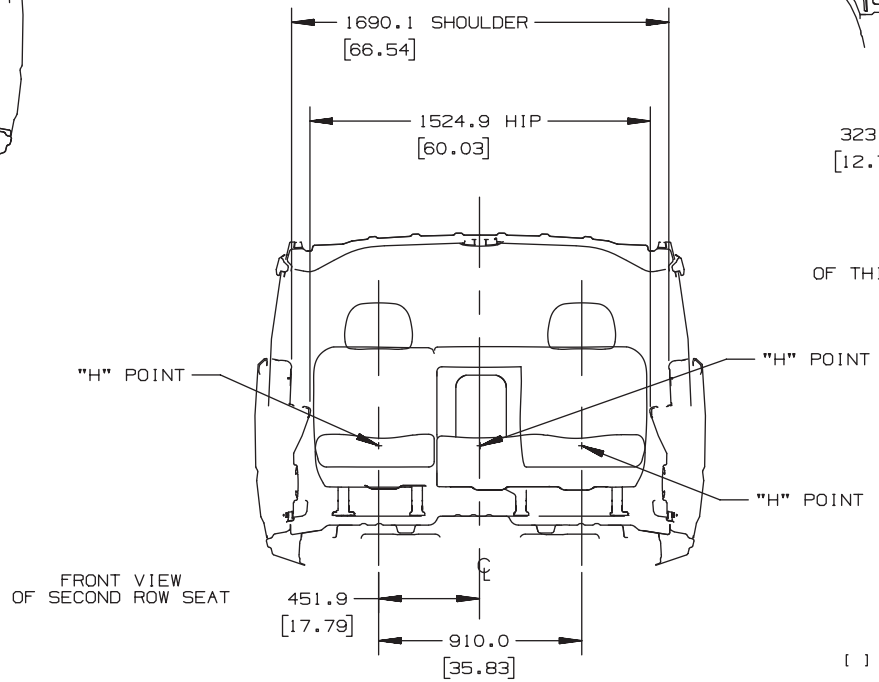

FRONT VIEW
OF SECOND ROW SEAT

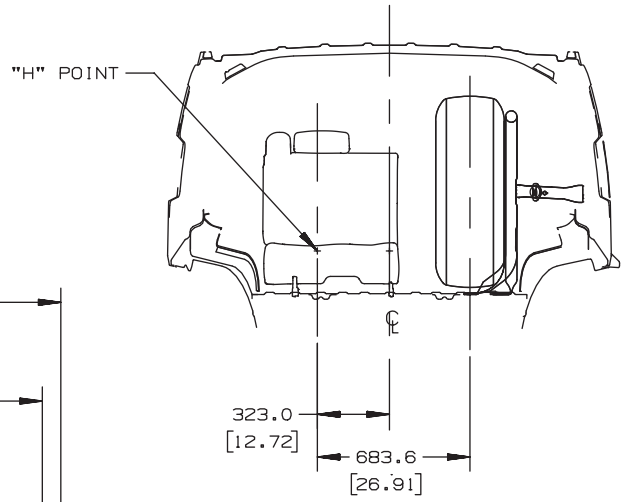

FRONT VIEW
OF THIRD ROW SEAT & SPARE TIRE

[ ] = INCHES

TD005999b

HUMMER, H2 – SPORT UTILITY VEHICLE (SUV)

Frame & Crossmember Arrangement - N25706

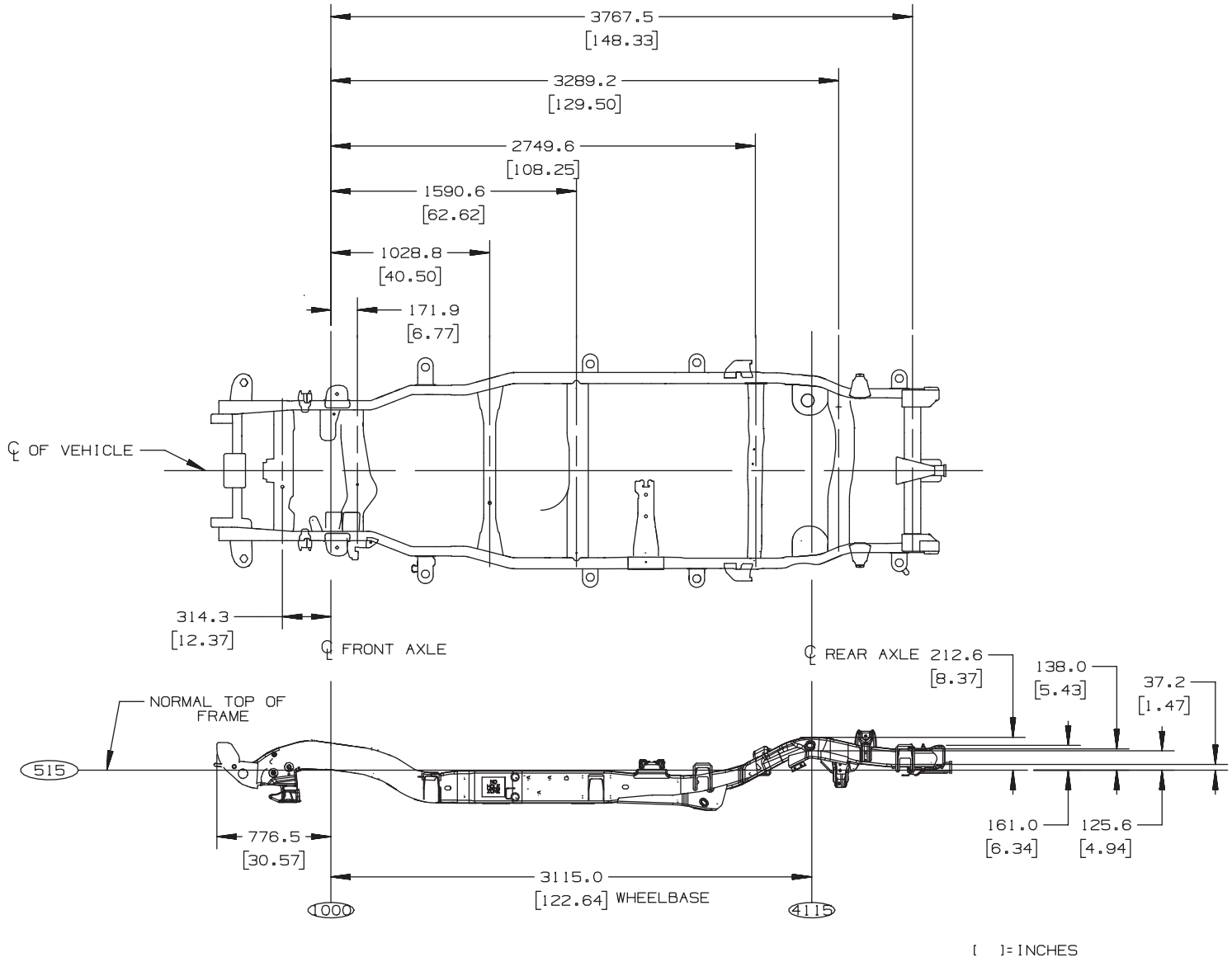

TD005995a

Front Axle/Suspension Tire Data - N25706

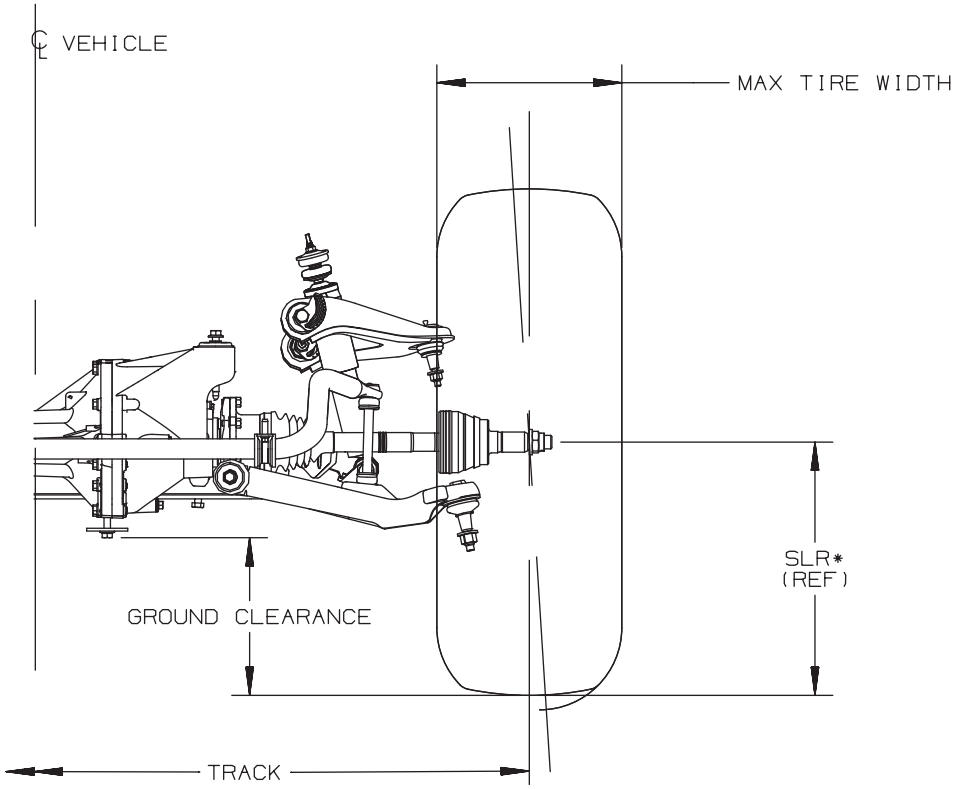

* MINIMUM GROUND CLEARANCE TO BE CALCULATED BY USING GROSS AXLE WEIGHT & RECOMMENDED TIRE PRESSURE

SERIES	TIRE	MAX GVW	REAR WHEEL	TRACK	WHEEL OFFSET	GROUND CLEARANCE	MAX TIRE WIDTH
N25706	LT315/70R17/D	8600	SINGLE	1762.0 (69.37)	31.0 (1.22)	228.0 (8.98)	329.0 (12.95)

[ ] = INCHES

TD005997a

HUMMER, H2 – SPORT UTILITY VEHICLE (SUV)

Rear Axle/Suspension Tire Data - N25706

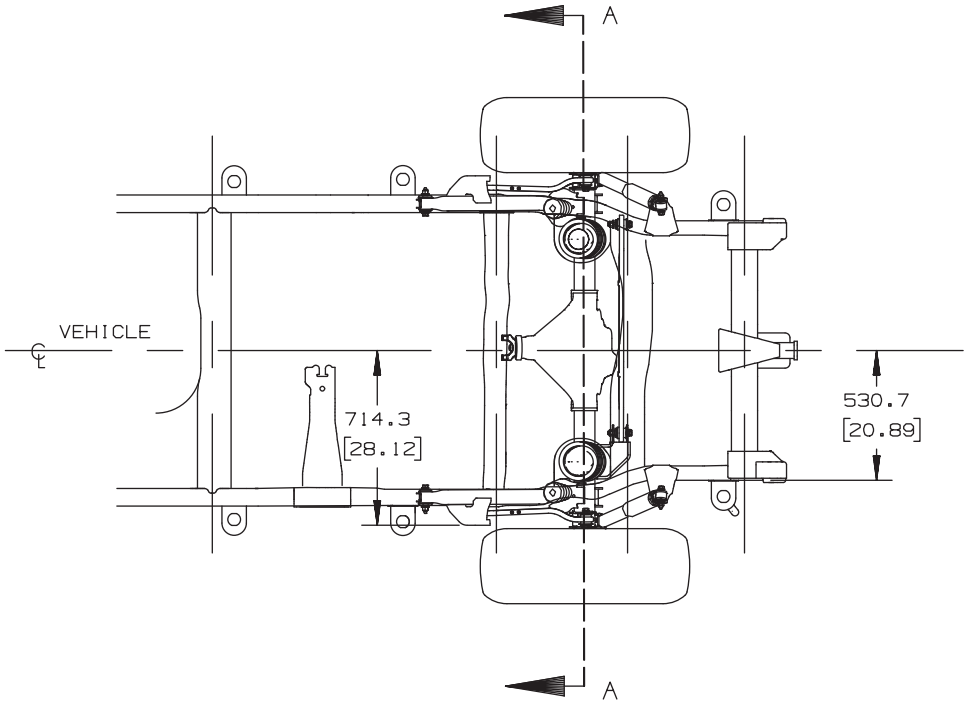

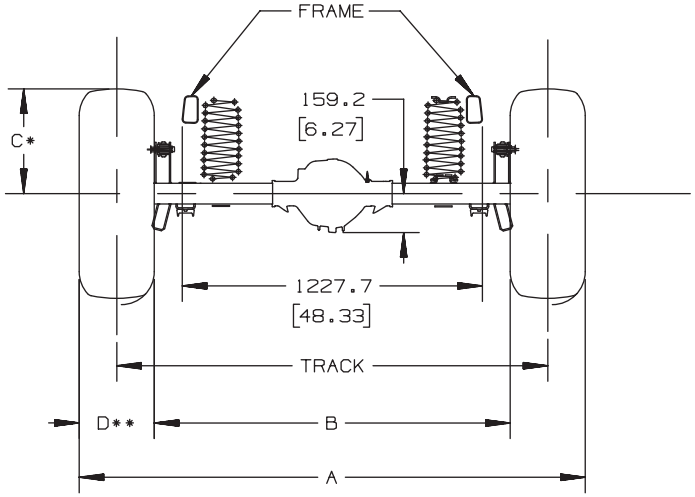

SECTION A - A
ROTATED 90°

SINGLE WHEELS
A = TRACK + D
B = TRACK - D

* MAX GROWN TIRE RADIUS ON NARROWEST RIM

** MAX GROWN TIRE WIDTH ON WIDEST RIM

TIRE 315 AIR

TIRE CHAINS NOT INCLUDED

SERIES	TIRES	GVW RANGE	REAR WHEEL	TRACK	WHEEL OFFSET	DIM A	DIM B	DIM C*	DIM D**
N25706	LT315/70R17/D	8600	SINGLE	1762.8 (69.40)	31.0 (1.22)	2091.8 (82.35)	1433.8 (56.45)	450.3 (17.73)	329.0 (12.95)

[ ] = INCHES

TD005998a

Exhaust System & Fuel Tank - N25706

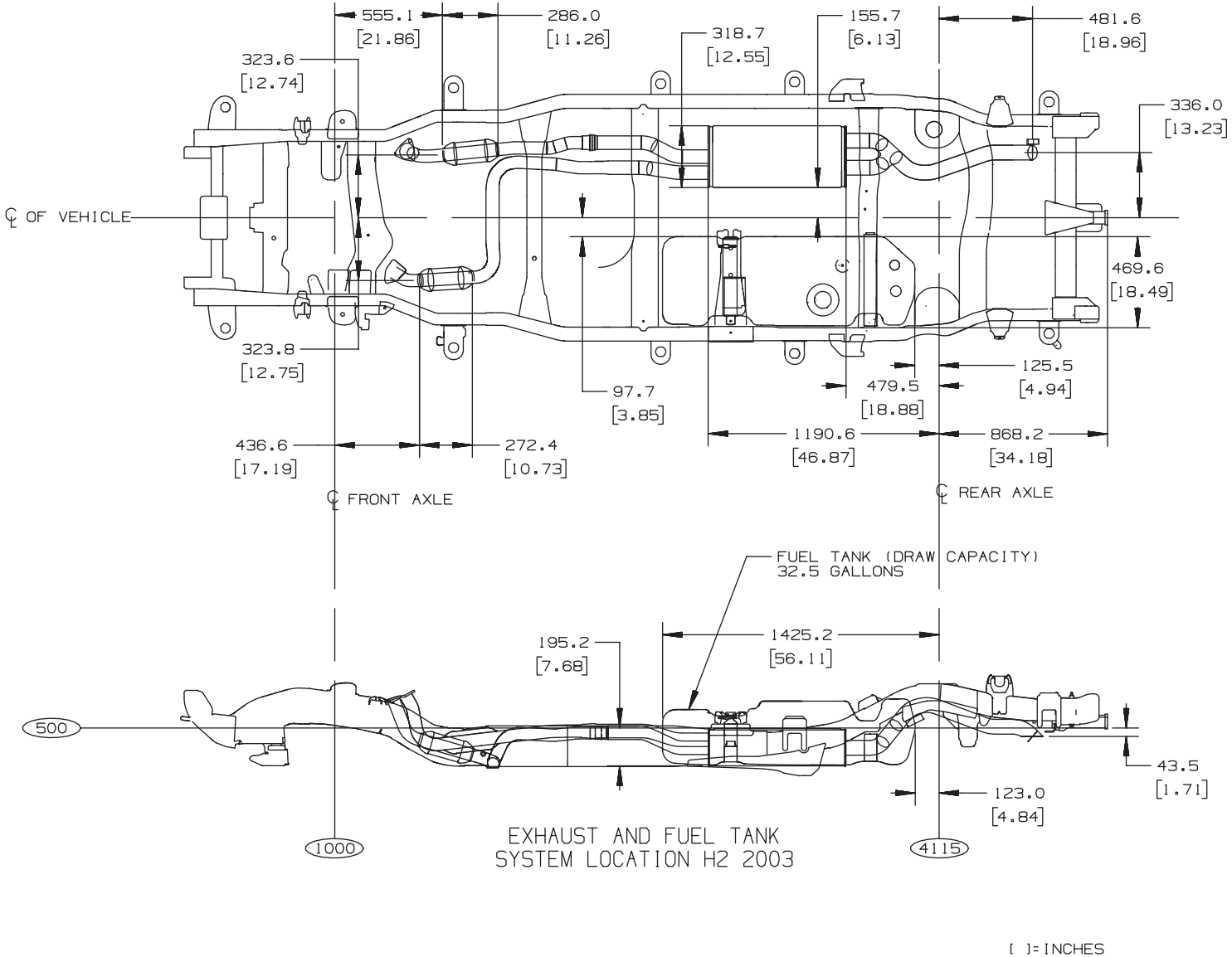

TD005996a